A Nidec Group Company
Nidec Motors & Actuators
All for dreams

Series GMPD
Motor type 404 682

Design Data	
Commutation	Brushed
Direction of rotation	Bi-directional
Bearing type	A:Sleeve - B:Sleeve

0320 AR

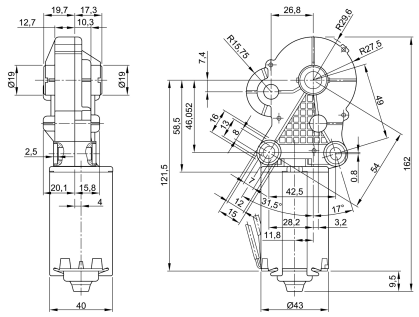

Performance data		
Rated voltage [V]	U_N	24
Nominal torque [Nm]	M_N	4.00
No-load speed [min^{-1}]	n_0	40.0
Nominal power [W]	P_N	14.8
Nominal current [A]	I_N	3.5
Nominal force [kN]	F_N	0.00
Duty cycle		s3

Sensor data	
Pulses	0
Output channels	0

Other data	
Gear ratio	210/1
Gear wheel material	plastic
Suppression components	7,5µH, 1nF
Enclosure class	IP 40
Weight [kg]	0.440

Remarks:

Motor picture

Characteristic curves

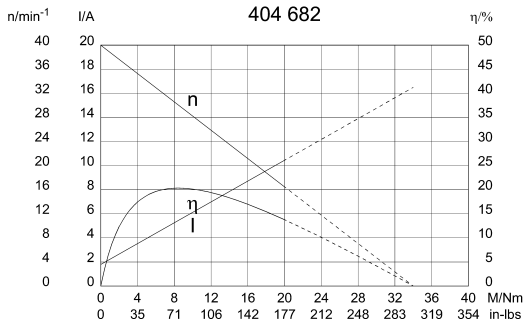

Output shaft drawing (W), Wiring diagrams (S) and Connector layout (K)

W 224

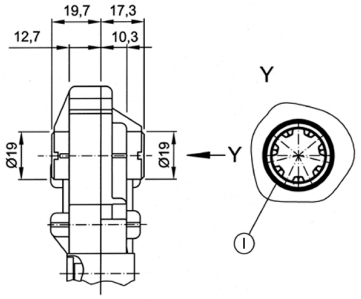

S 30

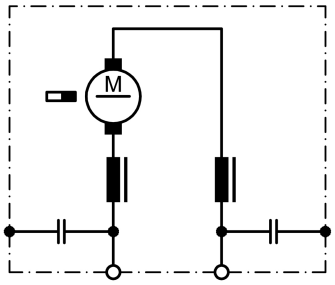

K 206

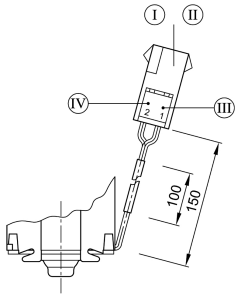

I through Profile KRC 316928 AEIZ 01

tap housing 365057-3, **timer contacts** 928781-5

mating with **receptacle housing** 365058-3,
timer contacts 927768-1
1 black motor, **2 blue** motor